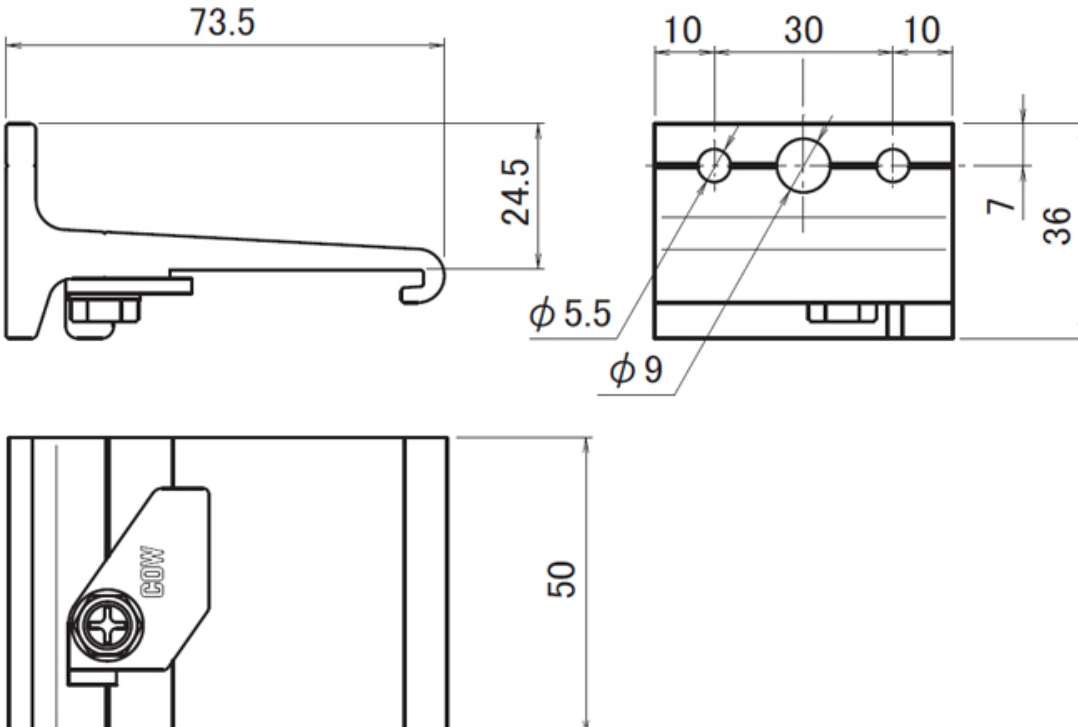
73.5
24.5
10
30
10
7
36
ϕ5.5
ϕ9
COW
50